INSTALLATION/OPERATION MANUAL

BROASTER® HDM-4 AND HDM-6
PERFECT HOLD™ DELI CASE

Be sure ALL installers read, understand, and have access to this manual at all times.

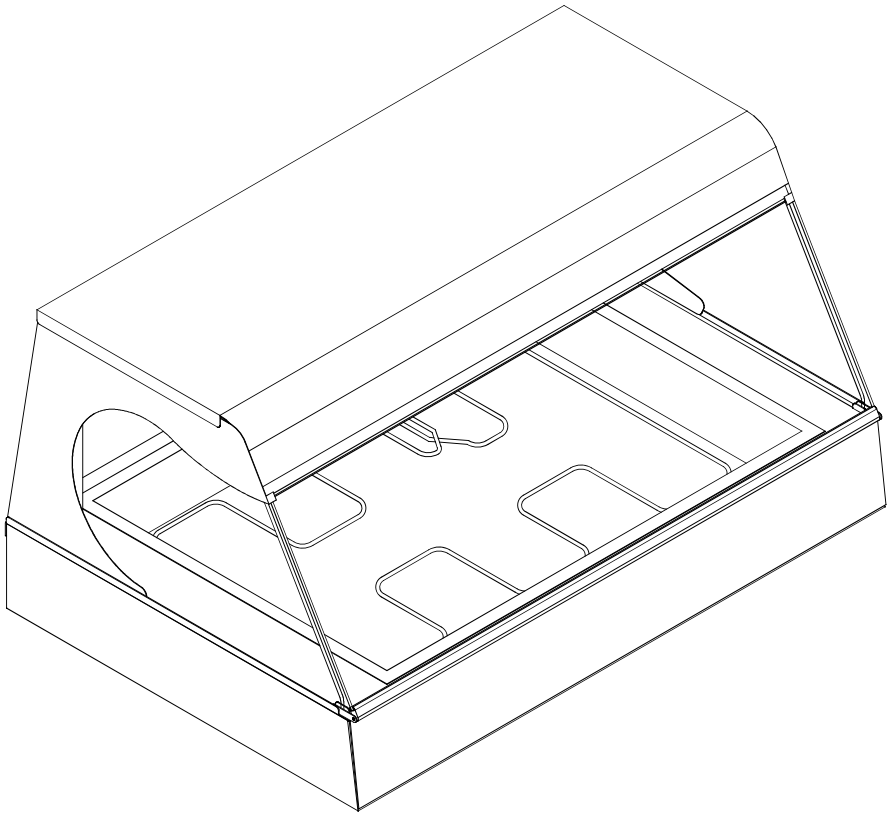

Genuine Broaster Chicken®, Broasted®, Broaster Chicken®, Broaster Foods®. and Broasterie® are registered trademarks. Usage is available only to licensed operators with written authorization from The Broaster Company.

Broaster Company
2855 Cranston Road, Beloit, WI 53511-3991
608/365-0193 broaster.com

Design Certified By:
NSF and UL

15375 9/19 Rev 09/23

© 2001 Broaster Company
Printed In U.S.A.

FOR YOUR SAFETY
Do not use or store gasoline or other flammable vapors or liquids in the vicinity of this or any other appliance.

WARNING Improper installation, adjustments, alteration, service or maintenance can cause property damage, injury or death. Read the installation, operating and maintenance instructions thoroughly before installing or servicing this equipment.

For the sake of safety and clarity, the following words used in this manual are defined as follows:

DANGER **Indicates an imminently hazardous situation which, if not avoided, could result in serious injury or death.**

WARNING **Indicates a potentially hazardous situation which, if not avoided, could result in serious injury or death.**

CAUTION **Indicates a potentially hazardous situation which, if not avoided, could result in minor injury, property damage or both.**

All adjustments and repairs shall be made by an authorized Broaster Company representative.

If there is a power failure, turn power switch OFF. DO NOT attempt to operate unit during a power failure.

WARNING **Failure to read and understand this manual completely could result in serious injury or death. Be sure ALL operators read, understand and have access to this manual at all times.**

WARNING **Rags or papers containing cooking oil can catch fire if exposed to heat. Laundering will not remove the oil. Dispose of all oil-soiled papers and rags in a trash container that is in a ventilated area away from all cooking equipment or other heat sources such as direct sunlight.**

TABLE OF CONTENTS

1 - WARRANTY ..... 1 - 1

2 - INTRODUCTION ..... 2 - 1
DESCRIPTION ..... 2 - 1
FEATURES ..... 2 - 1

3 - OWNER'S RESPONSIBILITY ..... 3 - 1

4 - UNCRATING ..... 4 - 1
LIST OF PARTS ..... 4 - 1
Base Mounted Unit ..... 4 - 1
Countertop Unit ..... 4 - 1
INSTALLATION OF LOOSE PARTS ..... 4 - 1
Side Glass ..... 4 - 1
Back Doors ..... 4 - 2
Elements ..... 4 - 2
Pan Dividers (HDM-4 Shown) ..... 4 - 2

5 - ELECTRICAL REQUIREMENTS ..... 5 - 1
ELECTRICAL REQUIREMENTS ..... 5 - 1
ELECTRICAL CHARACTERISTICS ..... 5 - 1
ELECTRICAL CONNECTIONS ..... 5 - 1
Model HDM-4 Wiring Diagram ..... 5 - 2
Model HDM-6 Single Phase Wiring Diagram ..... 5 - 3
Model HDM-6 Single Phase Wiring Diagram (effective BD6A40) ..... 5 - 4
Model HDM-6 Three Phase Wiring Diagram ..... 5 - 5
Model HDM-6 Three Phase Wiring Diagram (effective BD6A40) ..... 5 - 6
Model HDM-4XP Single Phase Wiring Diagram ..... 5 - 7
Model HDM-6XP Single Phase Wiring Diagram ..... 5 - 8

6 - GETTING TO KNOW YOUR DELI CASE ..... 6 - 1
Upper Control Panel (HDM-4 Shown) ..... 6 - 2
Lower Control Panel (HDM-4 Shown) ..... 6 - 2
Zones ..... 6 - 2

7 - OPERATION ..... 7 - 1
SETTING CONTROLS ..... 7 - 1
CLEANING ..... 7 - 1

8 - MERCHANDISING HINTS ..... 8 - 1

1 - LIMITED WARRANTY - Parts and labor

Subject to the terms and conditions of this warranty, The Broaster Company (Company) warrants that all equipment and parts manufactured or sold by the Company and purchased new from an authorized Company distributor are free from defects in material and workmanship for a period of **one year.** The warranty period begins at the date of installation or one year from the date of manufacture, whichever occurs earlier. To qualify for warranty coverage, all units must be installed by a qualified installer under supervision by an authorized distributor in accordance with applicable laws and regulations. Warranty coverage is extended to the original purchaser only and is void if the equipment is resold or relocated. If an authorized Company distributor is notified of a warranty claim during the warranty period, the Company will at its option replace, recondition, or repair at its factory any part or parts of the equipment which the Company judges defective, provided the equipment has been subjected to normal usage, properly installed, operated and serviced in accordance with Company operating instructions, and there is no evidence of accident, alteration or abuse of the equipment or the use of unauthorized repair methods. All parts replaced under this warranty carry only the unexpired term of the warranty.

Service under this warranty shall be furnished only by an authorized Company distributor. The Company does not send service representatives to furnish warranty service. Your authorized Company distributor should be contacted for warranty service.

This warranty covers **on-site labor charges only**, at a fixed rate, for one year, on new equipment only. The warranty period begins at the date of installation or one year from the date of manufacture, whichever occurs earlier. Transportation charges, trip charges, zone fees, or other expenses in connection with warranty service are the obligation of the owner.

This warranty does not apply to consumable items and supplies such as O-rings, food baskets, bulbs, gaskets and lamps.

The foregoing warranty is made in lieu of all other warranties, express or implied, and the Company specifically disclaims any implied warranties of merchantability or fitness for a particular purpose. The Company's full obligation under this warranty, and the purchaser's sole remedy, shall be limited to replacement, reconditioning or repair as specified above.

IN NO EVENT SHALL THE COMPANY BE LIABLE TO THE ORIGINAL OWNER OR ANY OTHER PERSON FOR ANY INCIDENTAL, CONSEQUENTIAL OR SPECIAL DAMAGES RESULTING FROM THE USE OR INABILITY TO USE THE EQUIPMENT COVERED HEREBY, WHETHER ARISING FROM BREACH OF WARRANTY, STRICT LIABILITY OR OTHERWISE.

The Company reserves the right to change or improve its products in any way without obligation to alter products previously manufactured.

Used Company equipment or Company equipment not purchased from an authorized distributor carries no warranty expressed or implied.

2 - INTRODUCTION

The Perfect Hold Deli Case is widely used in supermarkets, convenience stores and deli's for reliable food holding and display.

This manual has been produced to provide persons responsible for the operation and maintenance of the equipment with a simple but thorough understanding of its proper use. We urge that this manual be thoroughly read and understood prior to placing the deli case in operation.

As with any unit of food service equipment, the deli case does require a minimum of care and maintenance. Suggestions for maintenance and cleaning are contained in this manual and should become a regular part of the operation of the unit.

NOTICE **Before using, the deli case should be thoroughly cleaned in accordance with the instructions contained in this manual.**

Should repair or adjustment of the unit become necessary, we suggest that procedures described in this manual be followed. Or, if preferred, you may contact your local Broaster Company representative or service organization. You may also contact our home office located in Beloit, Wisconsin.

It is our sincere desire that you obtain the maximum benefit from your Perfect Hold Deli Case. If at any time you have questions or require assistance, please do not hesitate to contact us.

DESCRIPTION

The Perfect Hold Deli Case allows for food products to be held at required temperatures while maintaining their freshness and quality. The deli case features "clear-view" glass around the complete perimeter of the serving area allowing for full view by the customer.

FEATURES

- Holds a variety of pan configurations.
- Stainless steel trim.
- Easily accessible control panel.
- Main power switch.
- Recessed upper controls.
- Holding timers
- Heating elements removable for cleaning

3 - OWNER'S RESPONSIBILITY

It is the owner's responsibility to:

- Insure the deli case is properly maintained.
- Insure all warning signs are in their original location and are legible.
- Allow only properly trained personnel to operate, clean and maintain the warmer.
- Retain this manual for future reference.
- Insure main power supply is disconnected before the unit is serviced.
- Insure that all warning signs are intact and legible and this manual is included with the unit, when you sell, trade, dispose of or give away your warmer.

If you need replacement warning signs or manuals, contact an authorized Broaster Company representative or Broaster Company at 608/365-0193.

4 - UNCRATING

It is advisable to place the Perfect Hold Deli Case as close as possible to its permanent location prior to uncrating.

Each Broaster Perfect Hold Deli Case is wood crated for protection during shipment. Remove the top part of the crate first. Next, remove the side crating panels. The glass side panels, heating elements and rear doors are wrapped in cardboard and packed separately and must be installed.

LIST OF PARTS

Base Mounted Unit:

HDM-4	HDM-6	DESCRIPTION
1	1	Base
1	1	Perfect Hold™ deli case
2	2	Side glasses
2	3	Long pan dividers (with holes)
6	8	Short pan dividers
2	2	Back doors
6	10	Display lamps
1	1	Operator Manual
0	1	Small Heating Element
1	1	Large Heating Element

Countertop Unit:

HDM-4	HDM-6	DESCRIPTION
1	1	Perfect Hold™ deli case
2	2	Side glasses
2	3	Long pan dividers (with holes)
6	8	Short pan dividers
2	2	Back doors
6	10	Display lamps
1	1	Operator Manual
0	1	Small Heating Element
1	1	Large Heating Element

After the top panel and side panels have been removed, it is necessary to remove the warmer from the skid which it was shipped on. Cut the strapping to free the unit from the skid.

INSTALLATION OF LOOSE PARTS

All glass on this unit is certified tempered safety glass. The edges of this type of glass are the most vulnerable to fracture. The glass should be handled with extreme care when installing.

Note: Glass panels should never be placed with edges coming in contact with concrete or other hard surfaces. The glass may chip or break.

Clean all components and unit surfaces. See CLEANING.

Side Glass:

1. Remove side cover (A) by pulling outward on tab (B) then slide cover toward the rear of the unit.

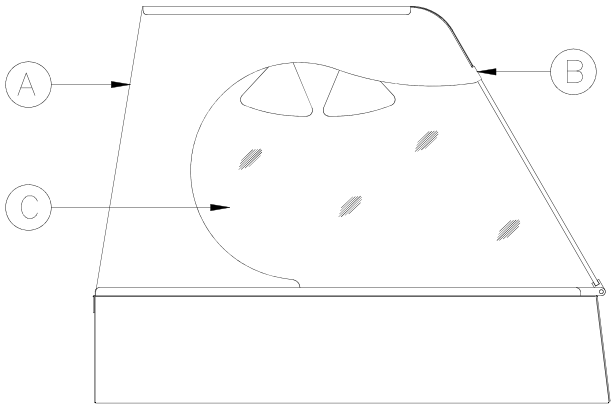

Continued:

WARNING **DO NOT push side glass too far toward the front of the unit. Front door may open causing glass to break. Broken glass can cause serious injury.**

2. Install side glass (C).

3. Reinstall side covers.

4. Repeat to install other side glass.

Back Doors:

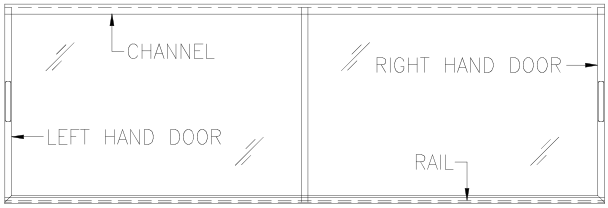

1. Insert left hand door into the inner channel at the top of the door opening.

2. Swing door bottom onto inner rail so door rides on the rail. Slide this door to the left.

3. Install right hand door into the outer channel at the top of the door opening.

4. Swing door bottom onto outer rail so door rides on the rail. Slide this door to the right.

Elements:

WARNING **DO NOT operate without heating elements in place.**

1. Place heating elements in appropriate well.

NOTICE **DO NOT place small heating element in large well.**

2. Insert male end of heating element into receptacle under guard until fully engaged.

NOTICE **This only applies to units with plug-in elements only.**

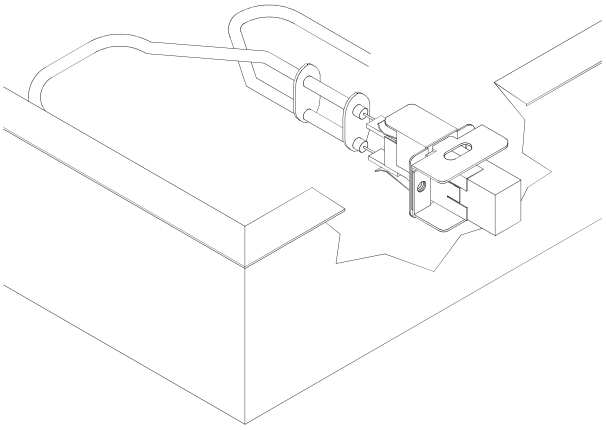

Pan Dividers (HDM-4 Shown):

Long dividers (5) and short dividers (6) can be used in the well (7) for many pan configurations. Below are two examples.

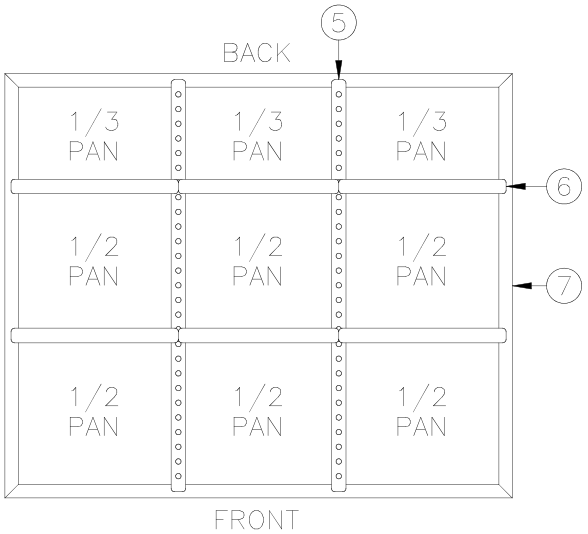

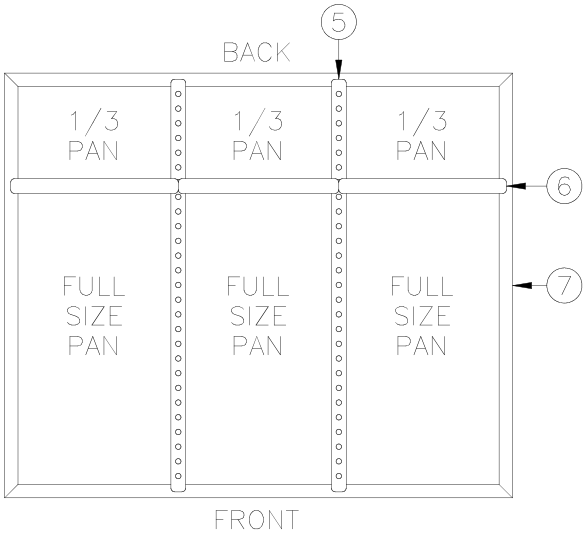

5 - ELECTRICAL REQUIREMENTS

ELECTRICAL REQUIREMENTS

CAUTION **Prior to connecting to the power source, verify the voltage and phase of the power source to which the unit will be connected. Make sure that the power source is identical to the power requirements identified on the data plate on the deli case. See chart below for necessary requirements.**

NOTICE **Connection of the deli case to the power source should only be done by a qualified, licensed electrician.**

Refer to the wiring diagram contained in these directions when connecting to the power source. The deli case **must be adequately and safely grounded**. Refer to local electrical codes and national electrical code for correct grounding procedures.

ELECTRICAL CHARACTERISTICS

Be sure to check the wiring diagram. It shows electrical circuits and connections.

> When installing or servicing the unit, always check the data plate to make certain proper parts are used and the correct service rendered. See electrical ratings in chart on page 2. **DO NOT** apply a voltage to the unit other than that shown on the data plate. If in doubt, consult your local power company.

ELECTRICAL CONNECTIONS

> Turn unit OFF and disconnect main power supply.

> A remote circuit breaker or fuse should be installed in the main power supply located in a path of exit and clearly identified.

> When installed, the unit must be electrically grounded in accordance with local codes, or in the absence of local codes, with the National Electrical Code, ANSI/NFPA 70, or for Canada, the Canadian Electrical Code, CSA C22.2, as applicable.

> Use copper wire only for connections.

> If power run is over 50 feet, use next larger size wire.

> If no component operates, check main power supply. Be sure main circuit breaker is ON and main fuses are good.

ELECTRICAL RATINGS

DELI CASE MODEL	VOLTS	HZ	WATTS	AMPS	PLUG CONFIG	PHASE
HDM-4 - 4 ft Complete Deli Case	120/240	60	2900	15	4-wire grounded	1 PH
HDM-4 - 4 ft Countertop Deli Case	120/240	60	2900	15	4-wire grounded	1 PH
HDM-4 - 4 ft Complete Deli Case	120/208	60	2900	16	4-wire grounded	1 PH
HDM-4 - 4 ft Countertop Deli Case	120/208	60	2900	16	4-wire grounded	1 PH
HDM-6 - 6 ft Complete Deli Case	120/208	60	4500	16	5-wire grounded	3 PH
HDM-6 - 6 ft Countertop Deli Case	120/208	60	4500	16	5-wire grounded	3 PH
HDM-6 - 6 ft Complete Deli Case	120/240	60	4500	15	5-wire grounded	3 PH
HDM-6 - 6 ft Countertop Deli Case	120/240	60	4500	15	5-wire grounded	3 PH
HDM-6 - 6 ft Complete Deli Case	120/208 /240	60	4500	30	4-wire grounded	1 PH
HDM-6 - 6 ft Countertop Deli Case	120/208 /240	60	4500	30	4-wire grounded	1 PH

Model HDM-4 Wiring Diagram:

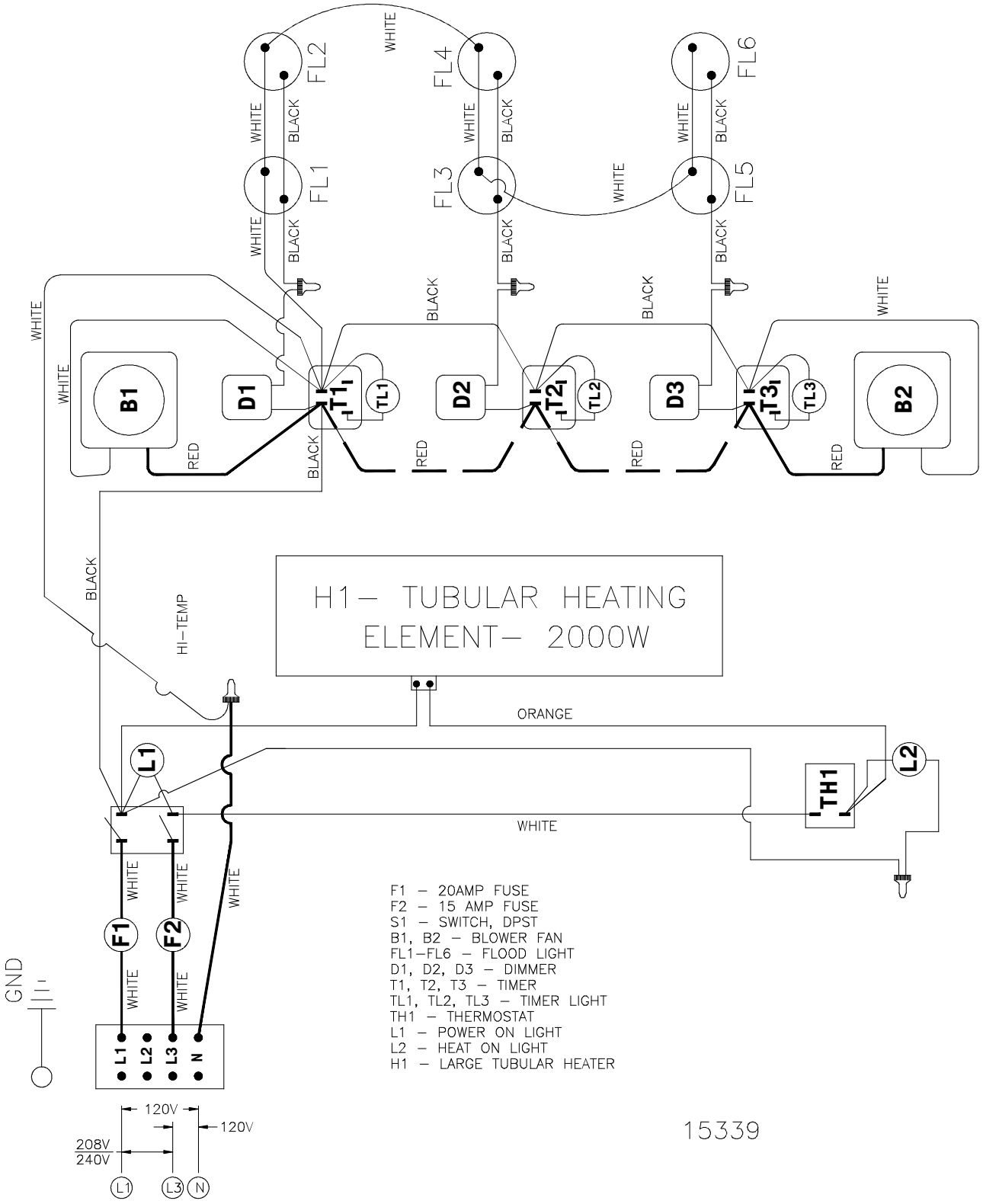

Model HDM-6: Single Phase Wiring Diagram:

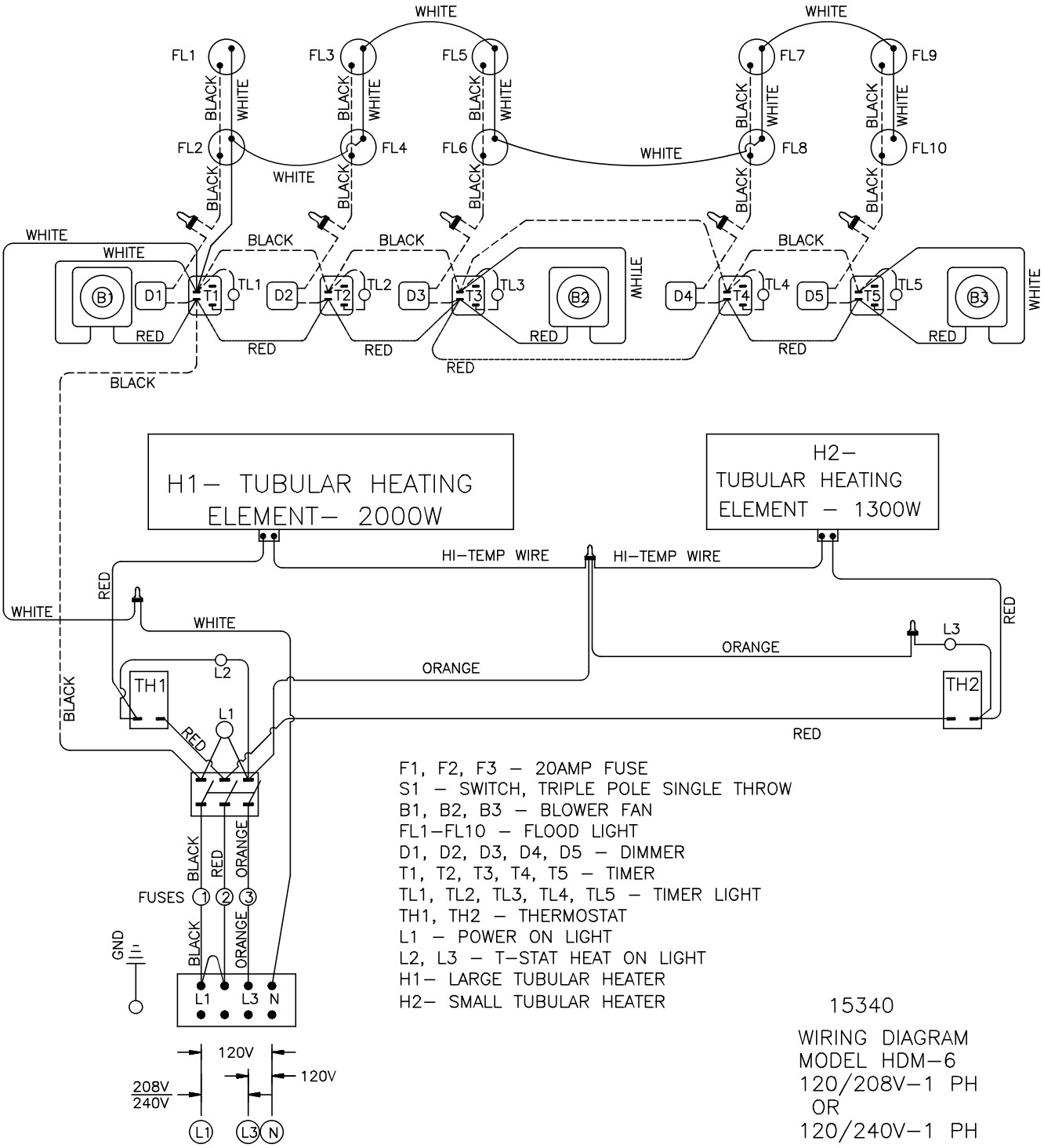

Model HDM-6: Single Phase Wiring Diagram <u>(EFFECTIVE BD6A40)</u>

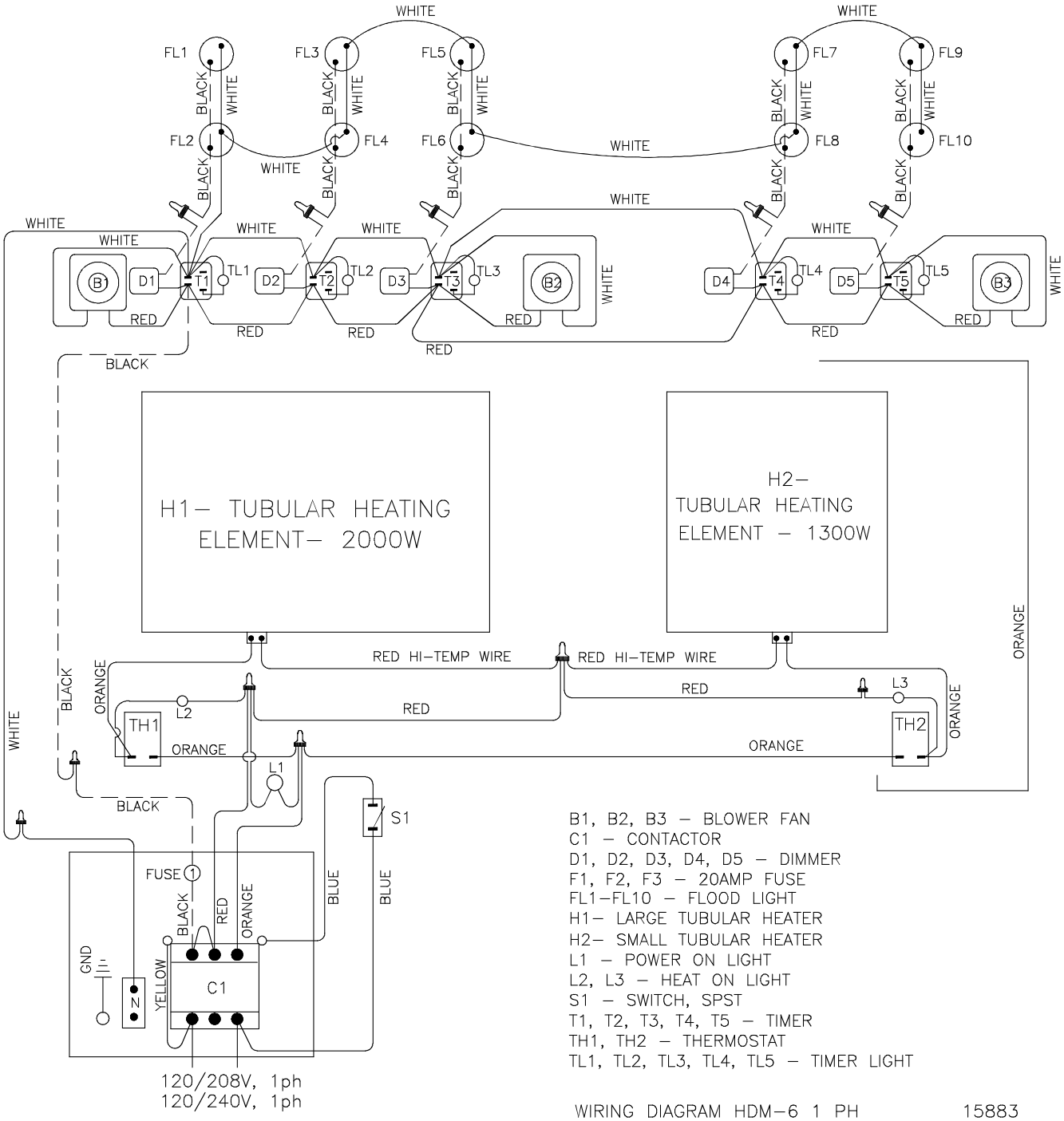

Model HDM-6: Three Phase Wiring Diagram:

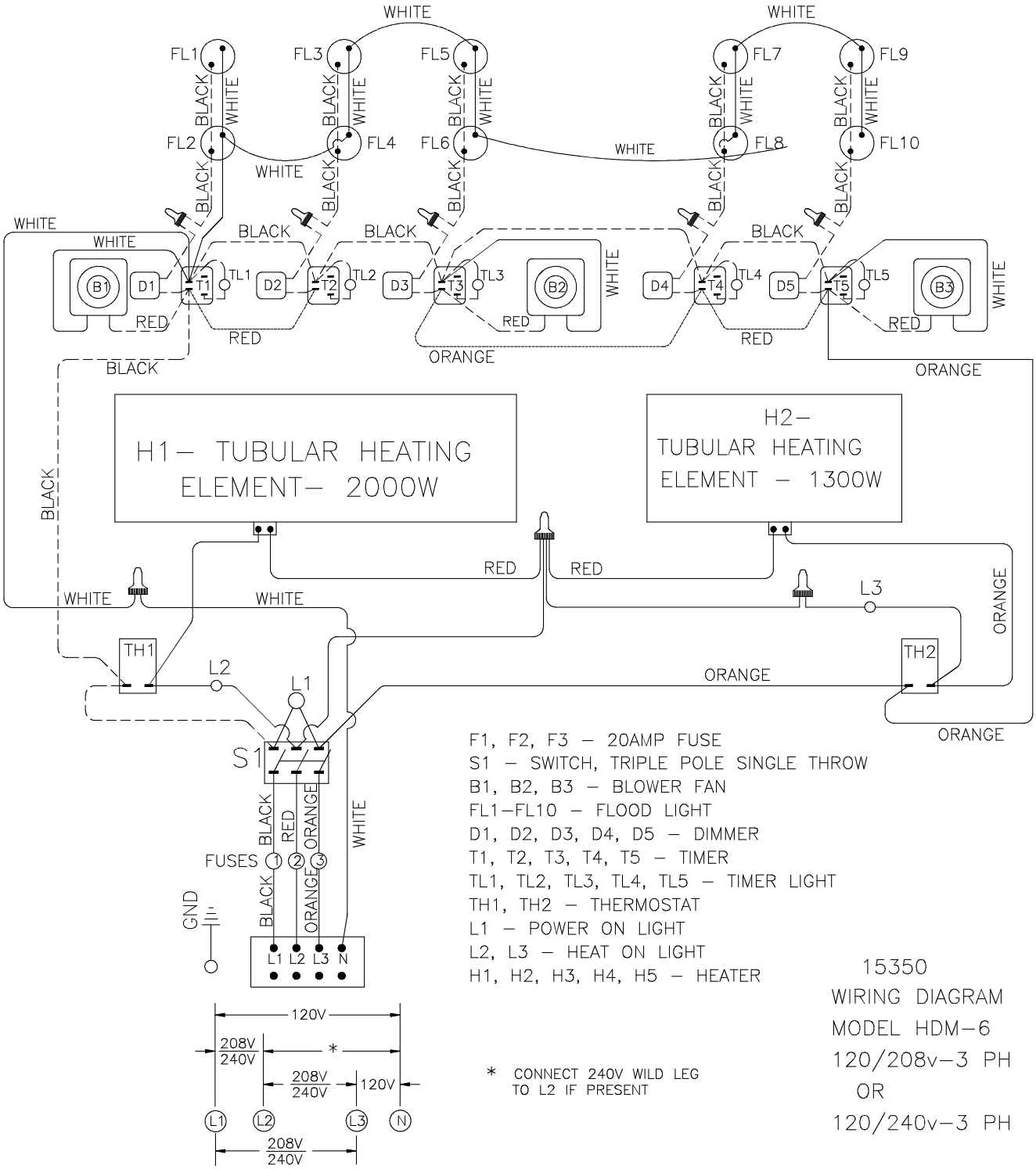

Model HDM-6: Three Phase Wiring Diagram (EFFECTIVE BD6A40)

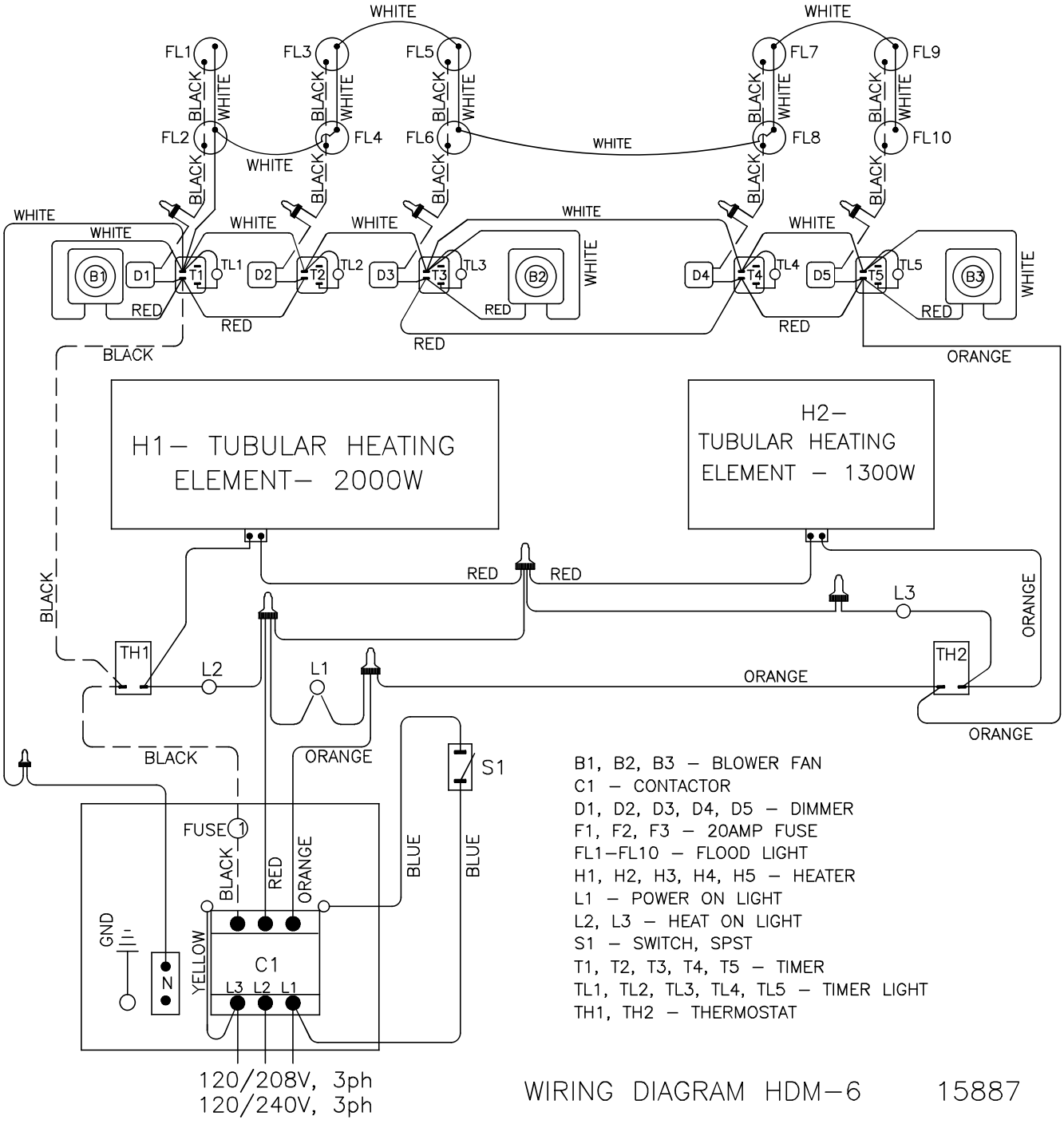

Model HDM-4XP EXPORT

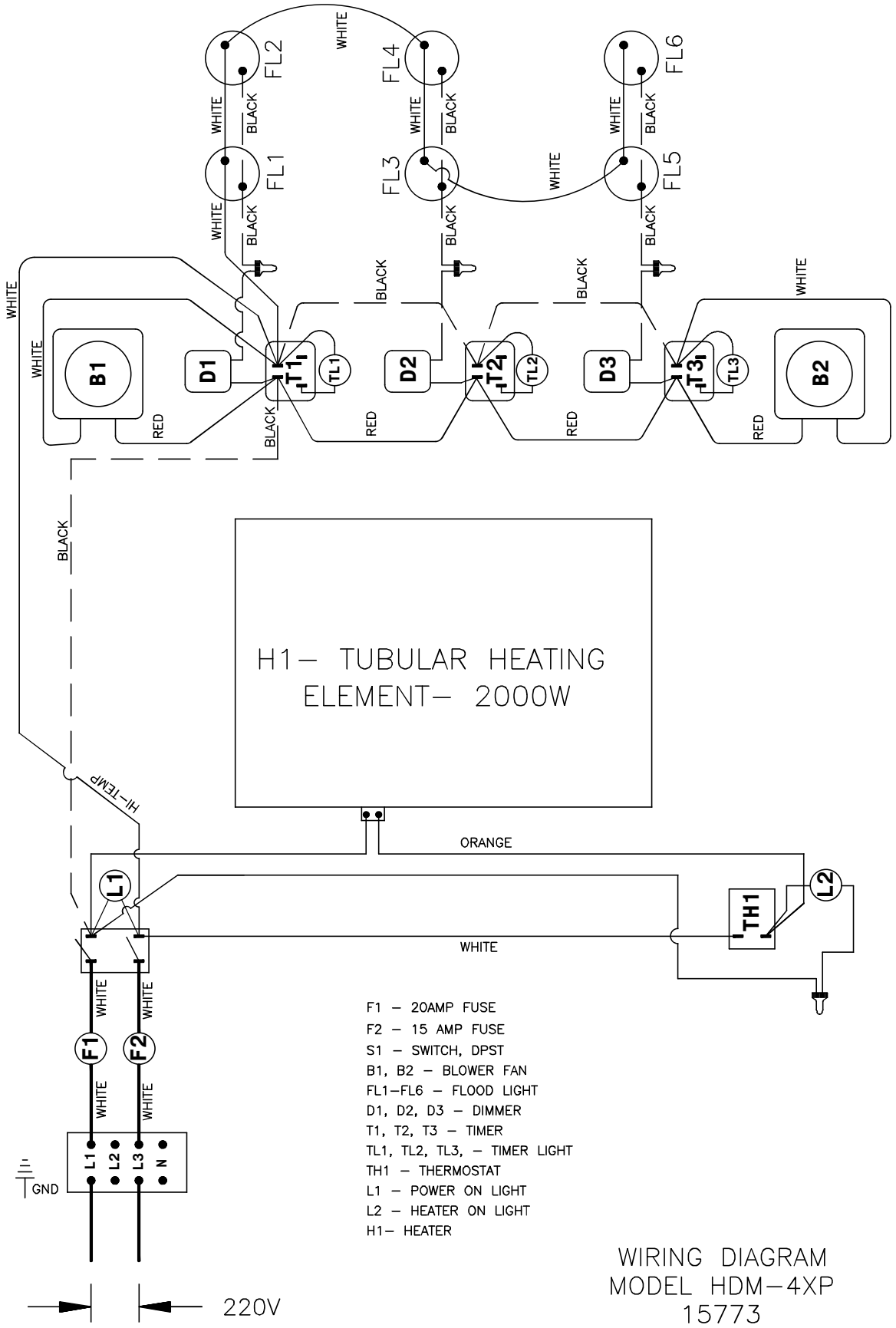

Model HDM-6XP EXPORT

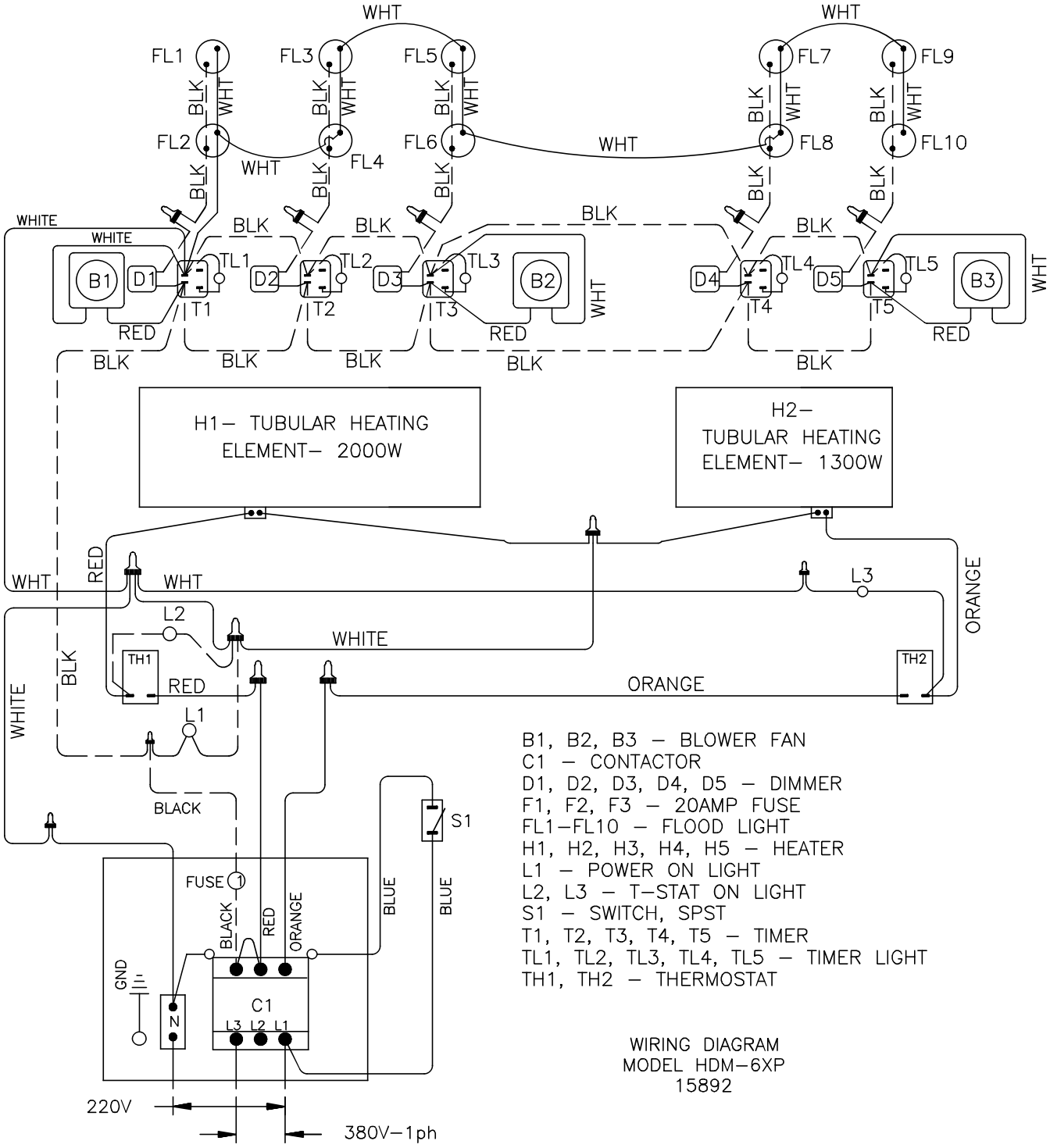

B1, B2, B3 – BLOWER FAN
C1 – CONTACTOR
D1, D2, D3, D4, D5 – DIMMER
F1, F2, F3 – 20AMP FUSE
FL1–FL10 – FLOOD LIGHT
H1, H2, H3, H4, H5 – HEATER
L1 – POWER ON LIGHT
L2, L3 – T–STAT ON LIGHT
S1 – SWITCH, SPST
T1, T2, T3, T4, T5 – TIMER
TL1, TL2, TL3, TL4, TL5 – TIMER LIGHT
TH1, TH2 – THERMOSTAT

WIRING DIAGRAM
MODEL HDM–6XP
15892

6 - GETTING TO KNOW YOUR DELI CASE

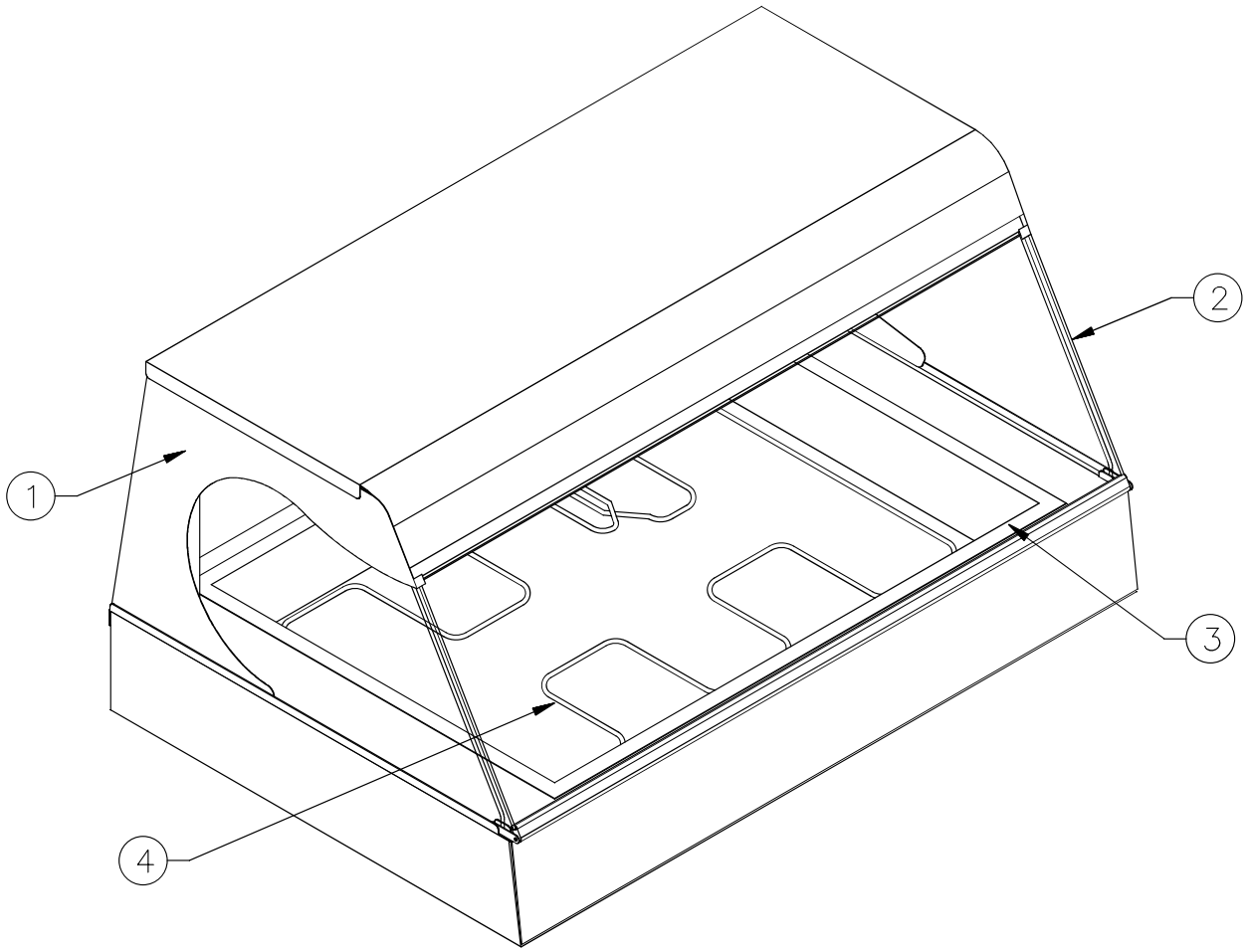

1. Side Cover: Retains side glass. Remove for cleaning.

2. Front Window: Rotate out and down for easy cleaning.

3. Well: Supports pan rails and food pans. Catches drop off from food pans.

4. Tubular Heating Element: Provides heat to maintain product temperature.

5. Display Lamp: Illuminates food in food pans and provides heat to maintain product temperature.

6. Side Glass: Removable for cleaning.

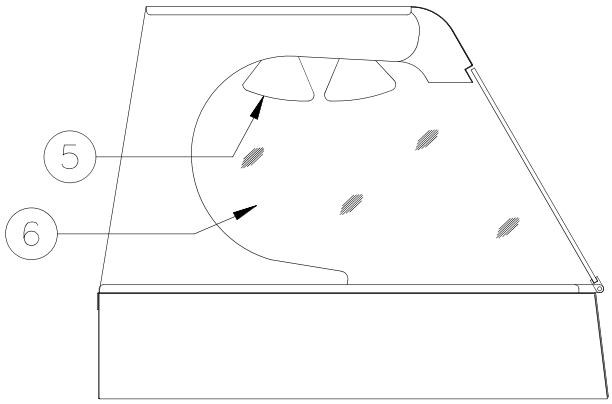

Upper Control Panel (HDM-4 Shown):

HDM-6: Food zones 4 and 5 are similar.

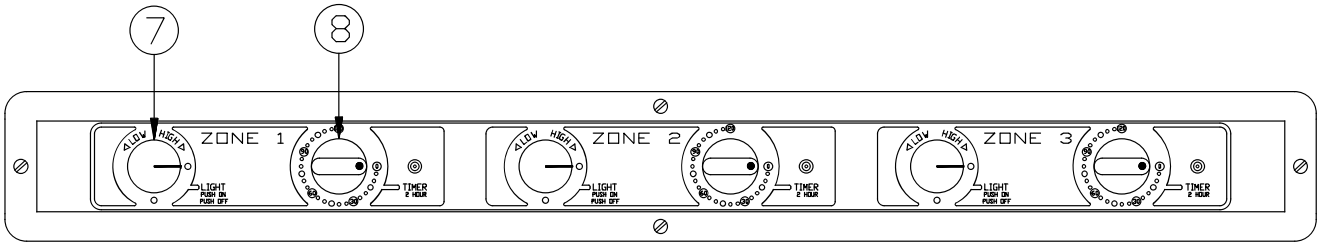

Lower Control Panel (HDM-4 Shown):

HDM-6 has a thermostat at each end of control panel. Fuses are located in the power input box.

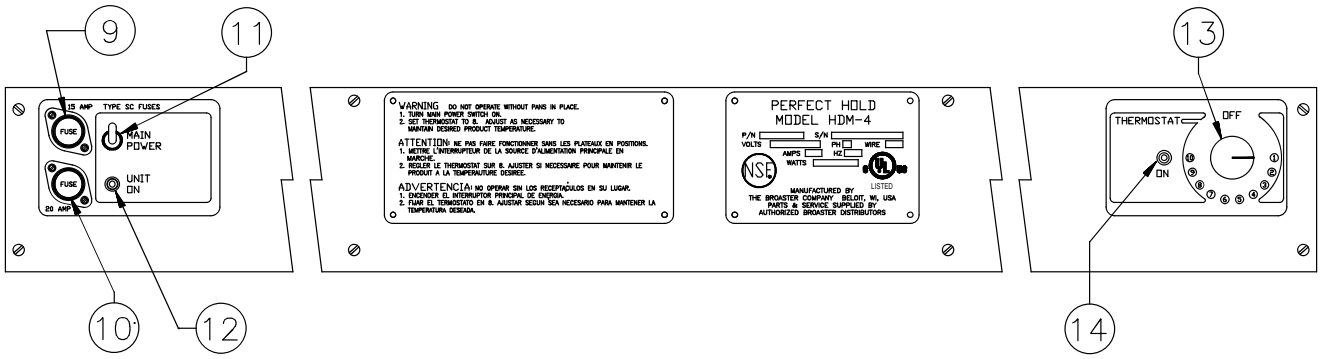

7. Display Lamp Dimmer: Push to turn lamps on and off. Rotate to adjust upper heating and brightness up or down.

8. Timer: Shows time countdown to help determine product freshness.

9. 15 Amp Fuse: Protects the heating elements (HDM-4 only).

10. 20 Amp Fuse: Protects the heating elements and display lamps.

11. Main Power Switch: Used to turn the unit ON and OFF.

12. Power On Indicator Light: Illuminates when the main power switch is turned ON.

13. Thermostat: Regulates well temperature up or down (Qty 2 on HDM-6).

14. Thermostat Indicator Light: Illuminates when the thermostat is calling for heat.

Zones (HDM-4 Shown):

There are three zones in the well. Each zone has separate controls as indicated on the upper control panel.

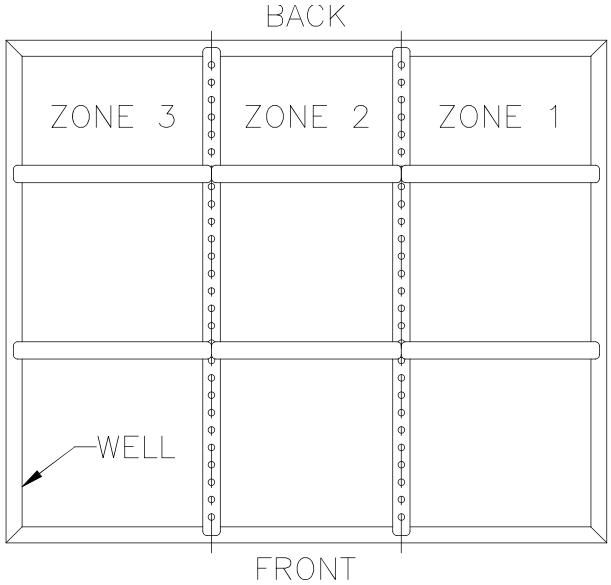

7 - OPERATION

SETTING CONTROLS

NOTICE **Fumes and/or odors may be produced when the unit is turned on for the first time. Leave unit on until there are no more fumes or odors. (est time: 2 to 3 hours)**

WARNING **The bottom of this equipment is hot. Touching it could result in a burn injury and allowing a flammable material to touch it could result in a fire.**

1. Turn main power ON.

2. Place empty pans in all open slots. Set thermostat(s) to 8 then let unit warm up for 20 minutes.

3. Turn dimmer switches to desired setting for upper heating and illumination.

4. Place food in food pans, to a 4 inch maximum depth, then into the warmer.

5. Monitor internal food temperature with a non-mercury thermometer. An internal food temperature of 150 degrees or above is recommended. (see local health codes). Adjust thermostat as necessary.

NOTICE **For your convenience, once you have set the dimmers and thermostat(s), use the main power switch to turn the unit on and off.**

CLEANING

WARNING **Wait for unit to cool before cleaning. Hot surfaces could cause serious burns. DO NOT attempt to clean hot glass. Glass may break causing serious cuts.**

Clean once daily using a mild household non-abrasive detergent.

1. Pull outward on tab (A) then rotate front window (B) out and down for cleaning.

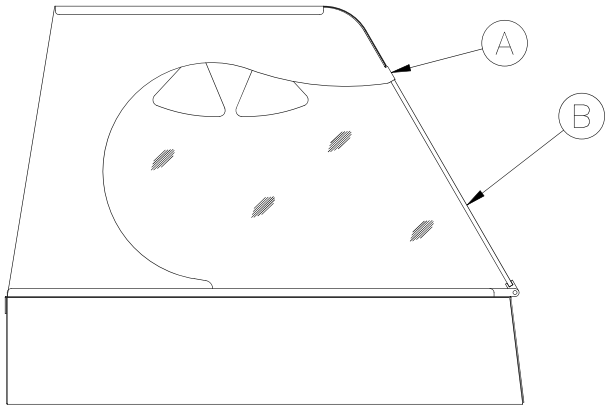

2. Remove side glass. See Side Glass under INSTALLING REMOVABLE PARTS. **DO NOT** use abrasive cleaners.

WARNING **DO NOT attempt to remove heating element when power switch is ON.**

3. Remove element(s) for cleaning. See Tubular Heating Elements under INSTALL REMOVABLE PARTS. Elements can be cleaned with a non-abrasive detergent.

WARNING **DO NOT immerse elements in water.**

4. Wipe unit interior and exterior with clean cloth or paper towel.

(Cont'd)

WARNING **Rags or papers containing cooking oil can catch fire if exposed to heat. Laundering will not remove the oil. Dispose of all oil-soiled papers and regs in a trash container that is in a ventilated area away from all cooking equipment or other heat sources such as direct sunlight.**

8 - MERCHANDISING HINTS

It's true what they say, "appearance is everything". And the appearance and merchandising of your hot food is no exception.

Great presentation of cooked products can create impulse sales and draw customers away from competing products. In the same respect, a poor presentation can turn consumers away and hurt everyone.

Following are some tips to ensure that your hot food is always looking and tasting its best!

- Be aware of how food is placed in the warmer. Always display with the best side of the product face up.
- Adjust the lighting to best complement the food. This can vary depending on the lighting in the room.
- Check the internal meat temperature periodically to ensure that it does not drop below a minimum of 150 degrees.
- Keep the warmer clean. Dirty pans and glass are an instant turn-off.
- Always try to keep the warmer at least 2/3 full.

  Tip: If this is difficult, put some empty carry-out boxes in the warmer to take up space.

- Remember FIFO (first-in-first-out). Always serve the product that has been in the warmer the longest first.
- For optimal quality, do not hold product for more than 60 minutes. If you still have product in the warmer past the recommended holding time, use in left-over recipes. **DO NOT** sell old product at a discount or give away - even to employees. The taste of that lesser product will remain with those who tasted it regardless of the price paid for it. That discounted product could cost hundreds of dollars in lost sales.

Broaster Company
2855 Cranston Road, Beloit, WI 53511-3991
608/365-0193
broaster.com